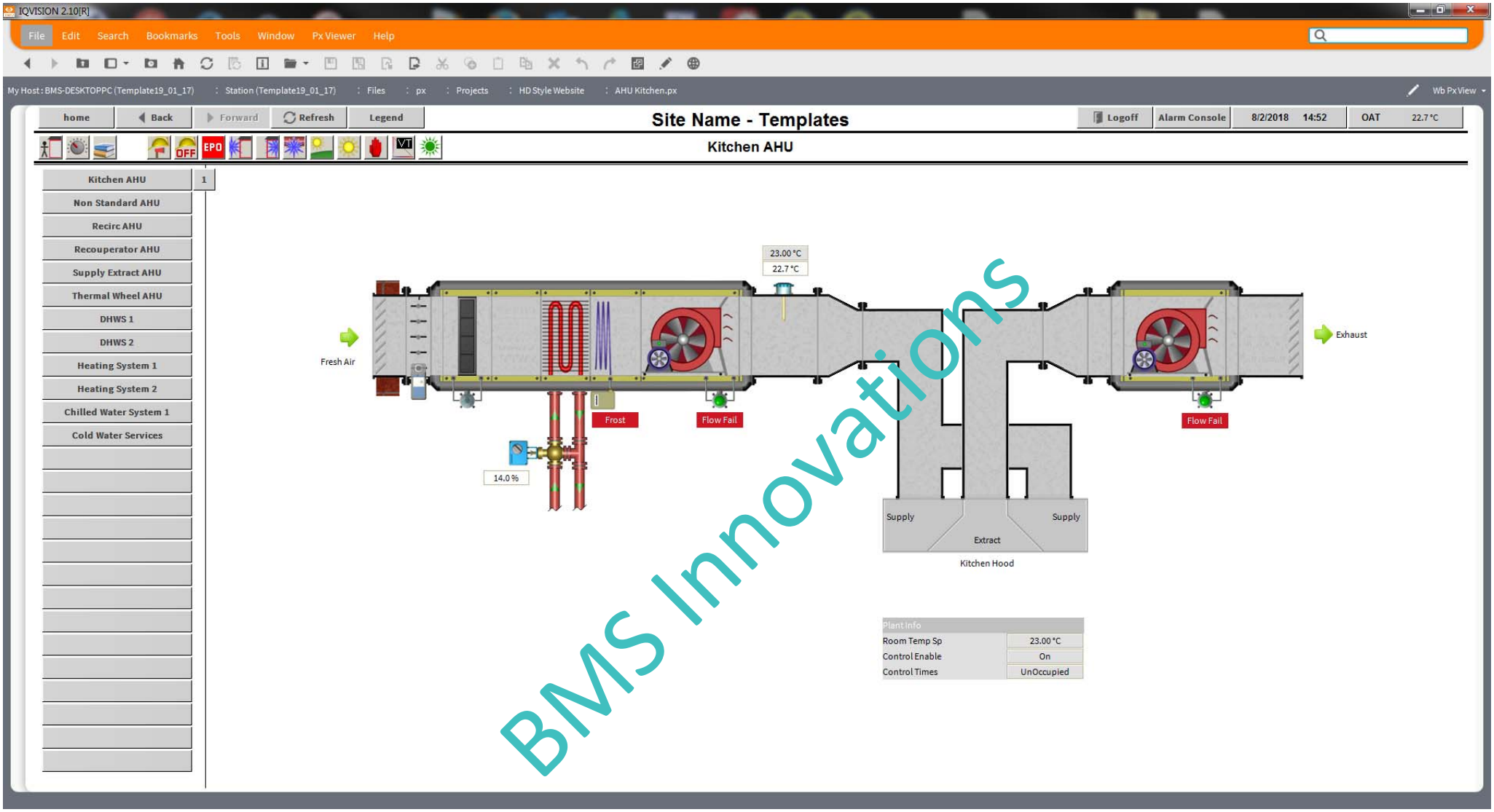
IQVISION 2.10[R]
File Edit Search Bookmarks Tools Window Px Viewer Help
My Host : BMS-DESKTOPPC (Template19_01_17) : Station (Template19_01_17) : Files : px : Projects : HD Style Website : AHU Kitchen.px
Wb Px View
home
Back
Forward
Refresh
Legend
Site Name - Templates
Logoff
Alarm Console
8/2/2018 14:52
OAT 22.7 °C
Kitchen AHU
Kitchen AHU
Non Standard AHU
Recirc AHU
Recouperator AHU
Supply Extract AHU
Thermal Wheel AHU
DHWS 1
DHWS 2
Heating System 1
Heating System 2
Chilled Water System 1
Cold Water Services
23.00 °C
22.7 °C
Fresh Air
Exhaust
Frost
Flow Fail
Flow Fail
14.0 %
Supply
Supply
Extract
Kitchen Hood
Plant Info
Room Temp Sp 23.00 °C
Control Enable On
Control Times UnOccupied
BMS Innovations

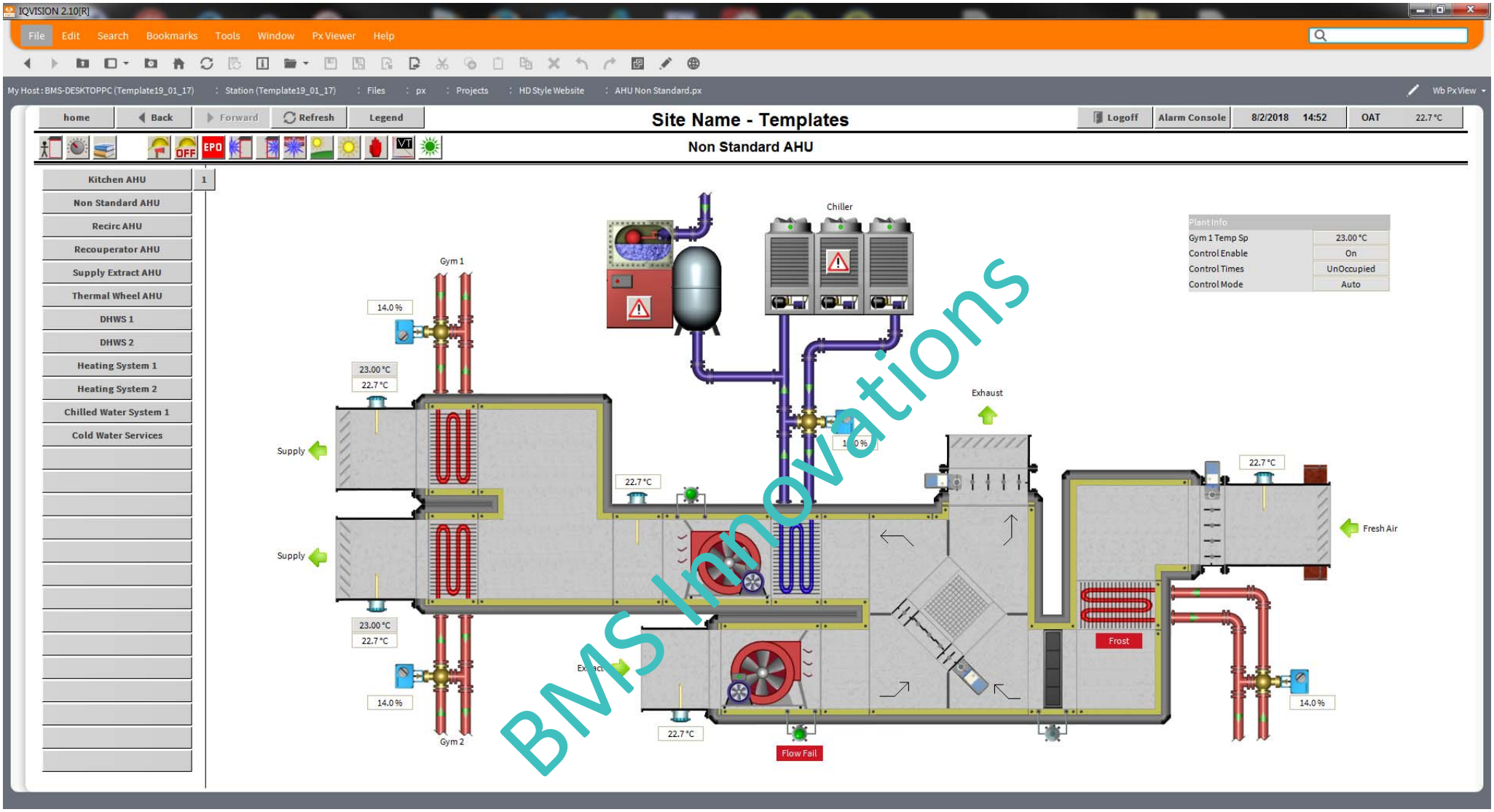
IQVISION 2.10[R]
File
Edit
Search
Bookmarks
Tools
Window
Px Viewer
Help
My Host : BMS-DESKTOPPC (Template19_01_17)
Station (Template19_01_17)
Files
px
Projects
HD Style Website
AHU Non Standard.px
Wb Px View
home
Back
Forward
Refresh
Legend
Site Name - Templates
Logoff
Alarm Console
8/2/2018 14:52
OAT 22.7 °C
Non Standard AHU
Kitchen AHU
Non Standard AHU
Recirc AHU
Recouperator AHU
Supply Extract AHU
Thermal Wheel AHU
DHWS 1
DHWS 2
Heating System 1
Heating System 2
Chilled Water System 1
Cold Water Services
Chiller
Gym 1
Gym 2
14.0 %
23.00 °C
22.7 °C
Supply
Exhaust
Fresh Air
Frost
Flow Fail
Plant Info
Gym 1 Temp Sp 23.00 °C
Control Enable On
Control Times UnOccupied
Control Mode Auto
BMS Innovations

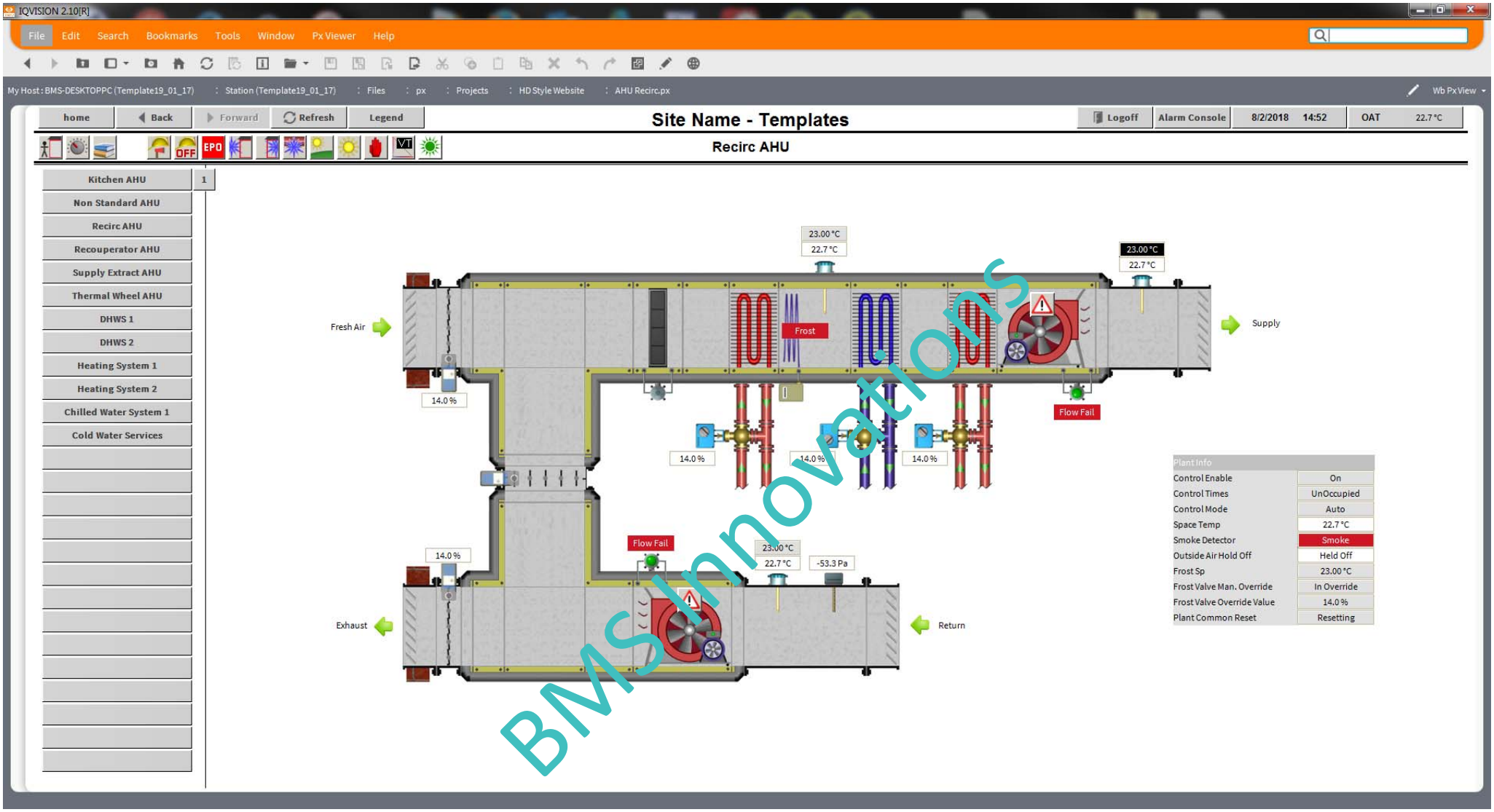

BMSInnovations

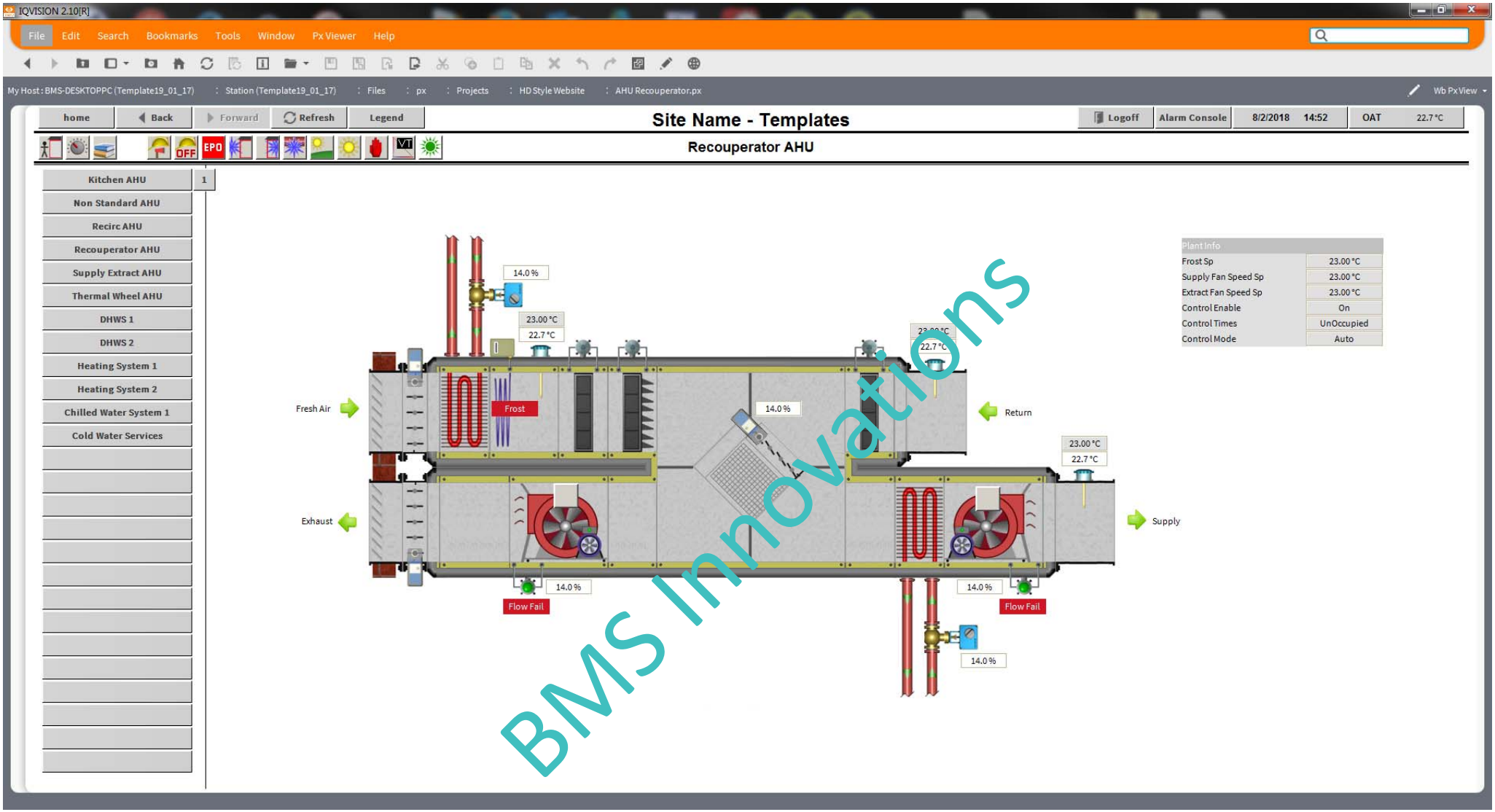
IQVISION 2.10[R]
File Edit Search Bookmarks Tools Window Px Viewer Help
My Host : BMS-DESKTOPPC (Template19_01_17) : Station (Template19_01_17) : Files : px : Projects : HD Style Website : AHU Recouperator.px
Wb Px View
home
Back
Forward
Refresh
Legend
Site Name - Templates
Logoff
Alarm Console
8/2/2018 14:52
OAT 22.7 °C
Recouperator AHU
Kitchen AHU
Non Standard AHU
Recirc AHU
Recouperator AHU
Supply Extract AHU
Thermal Wheel AHU
DHWS 1
DHWS 2
Heating System 1
Heating System 2
Chilled Water System 1
Cold Water Services
Fresh Air
Exhaust
Return
Supply
Frost
Flow Fail
14.0 %
23.00 °C
22.7 °C
Plant Info
Frost Sp 23.00 °C
Supply Fan Speed Sp 23.00 °C
Extract Fan Speed Sp 23.00 °C
Control Enable On
Control Times UnOccupied
Control Mode Auto
BMS Innovations

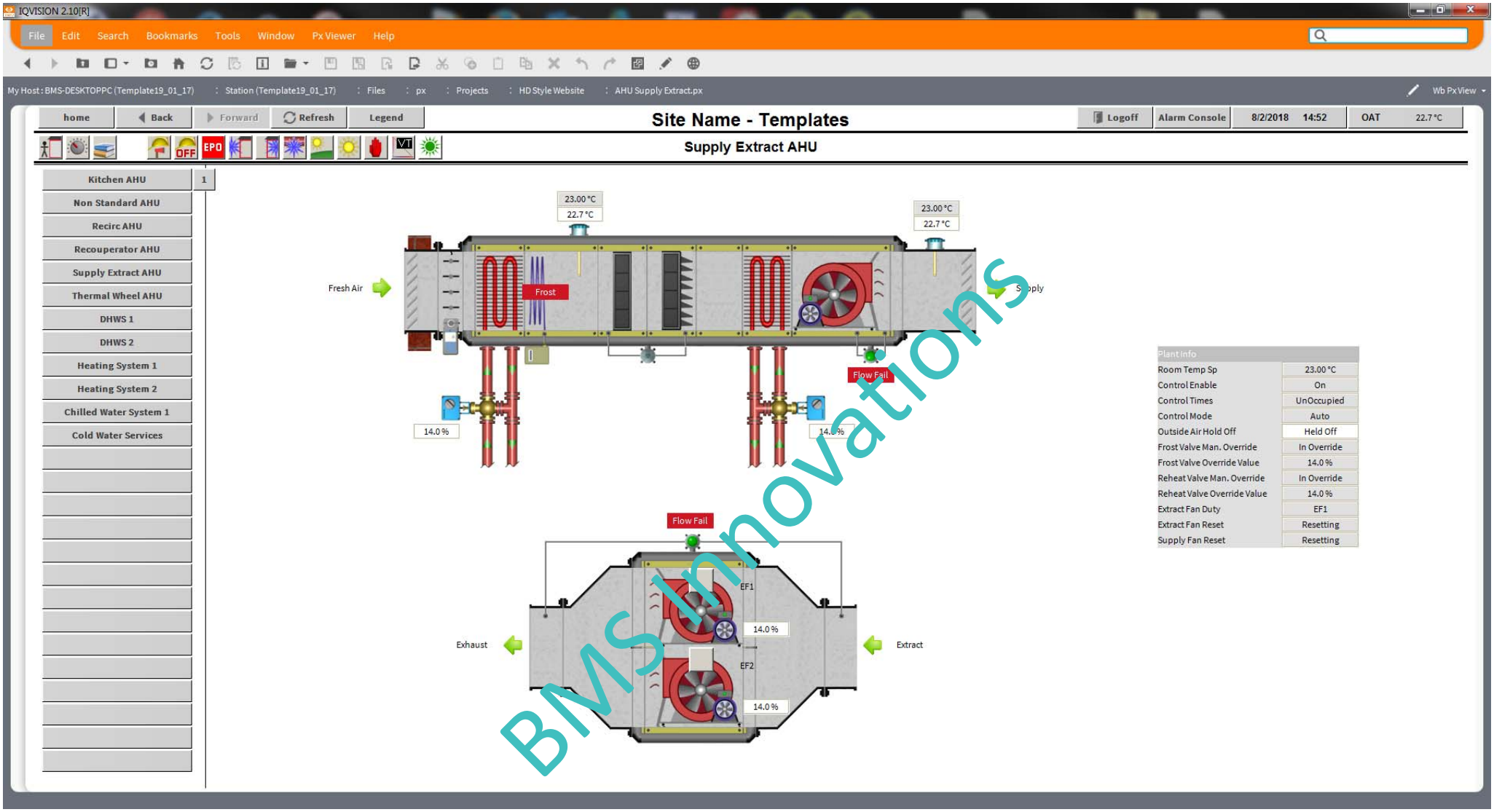

BMS Innovations

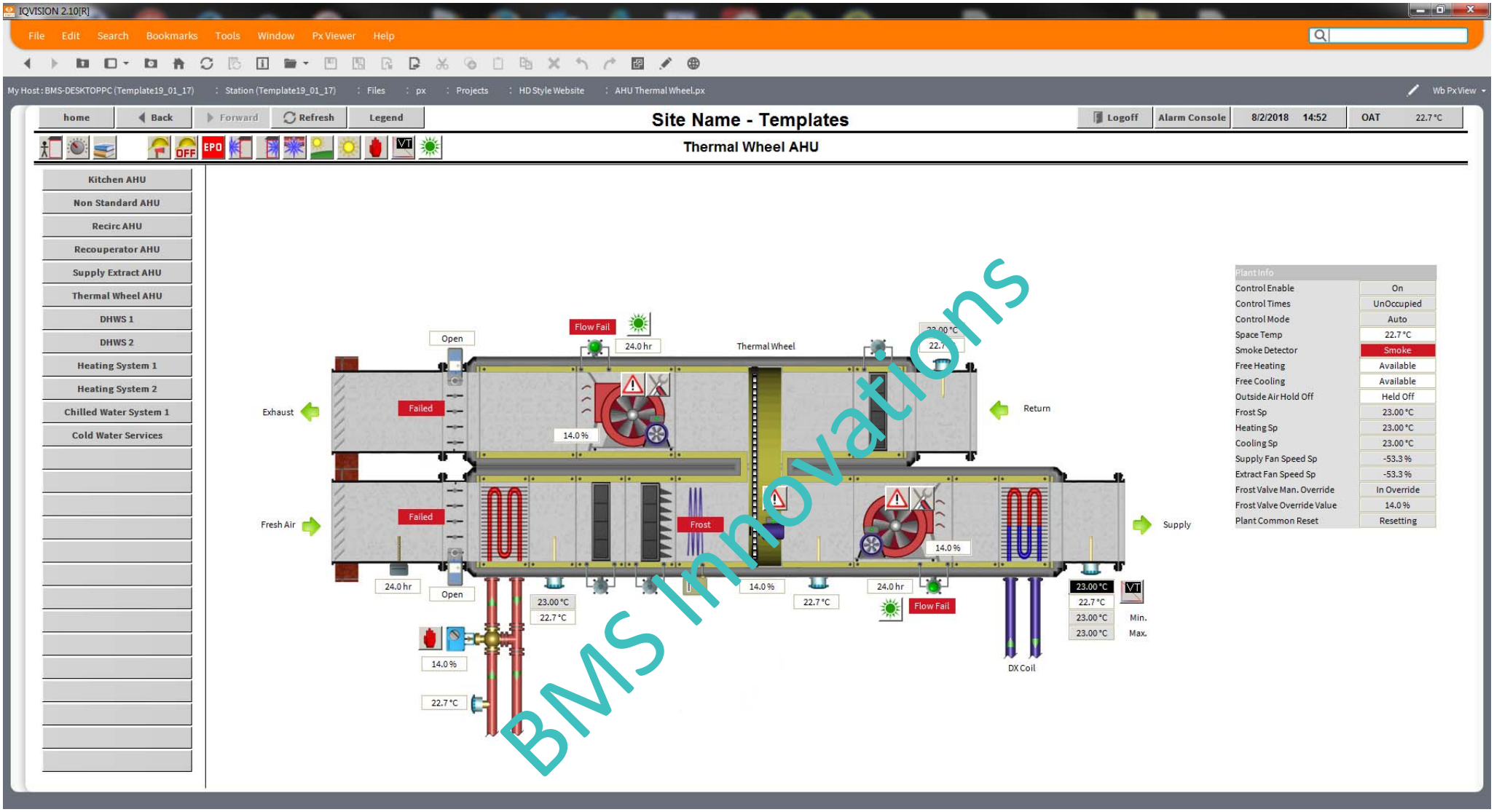

BMS Innovations

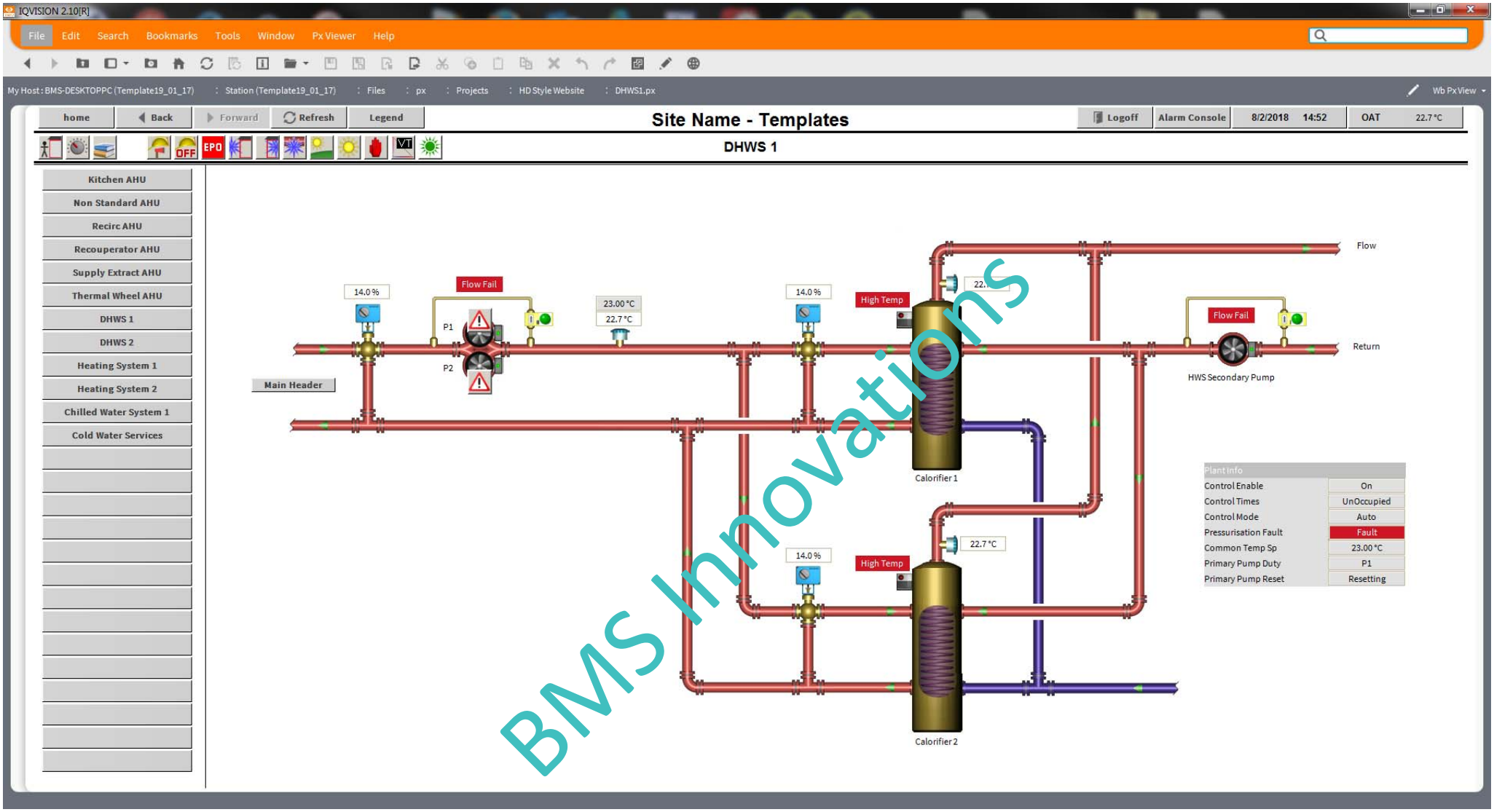
IQVISION 2.10[R]
File Edit Search Bookmarks Tools Window Px Viewer Help
My Host : BMS-DESKTOPPC (Template19_01_17) : Station (Template19_01_17) : Files : px : Projects : HD Style Website : DHWS1.px
Wb Px View
home
Back
Forward
Refresh
Legend
Site Name - Templates
Logoff
Alarm Console
8/2/2018 14:52
OAT 22.7 °C
DHWS 1
Kitchen AHU
Non Standard AHU
Recirc AHU
Recouperator AHU
Supply Extract AHU
Thermal Wheel AHU
DHWS 1
DHWS 2
Heating System 1
Heating System 2
Chilled Water System 1
Cold Water Services
Main Header
14.0 %
Flow Fail
P1
P2
23.00 °C
22.7 °C
High Temp
Calorifier 1
Calorifier 2
Flow
Return
HWS Secondary Pump
Plant Info
Control Enable On
Control Times UnOccupied
Control Mode Auto
Pressurisation Fault Fault
Common Temp Sp 23.00 °C
Primary Pump Duty P1
Primary Pump Reset Resetting
BMS Innovations

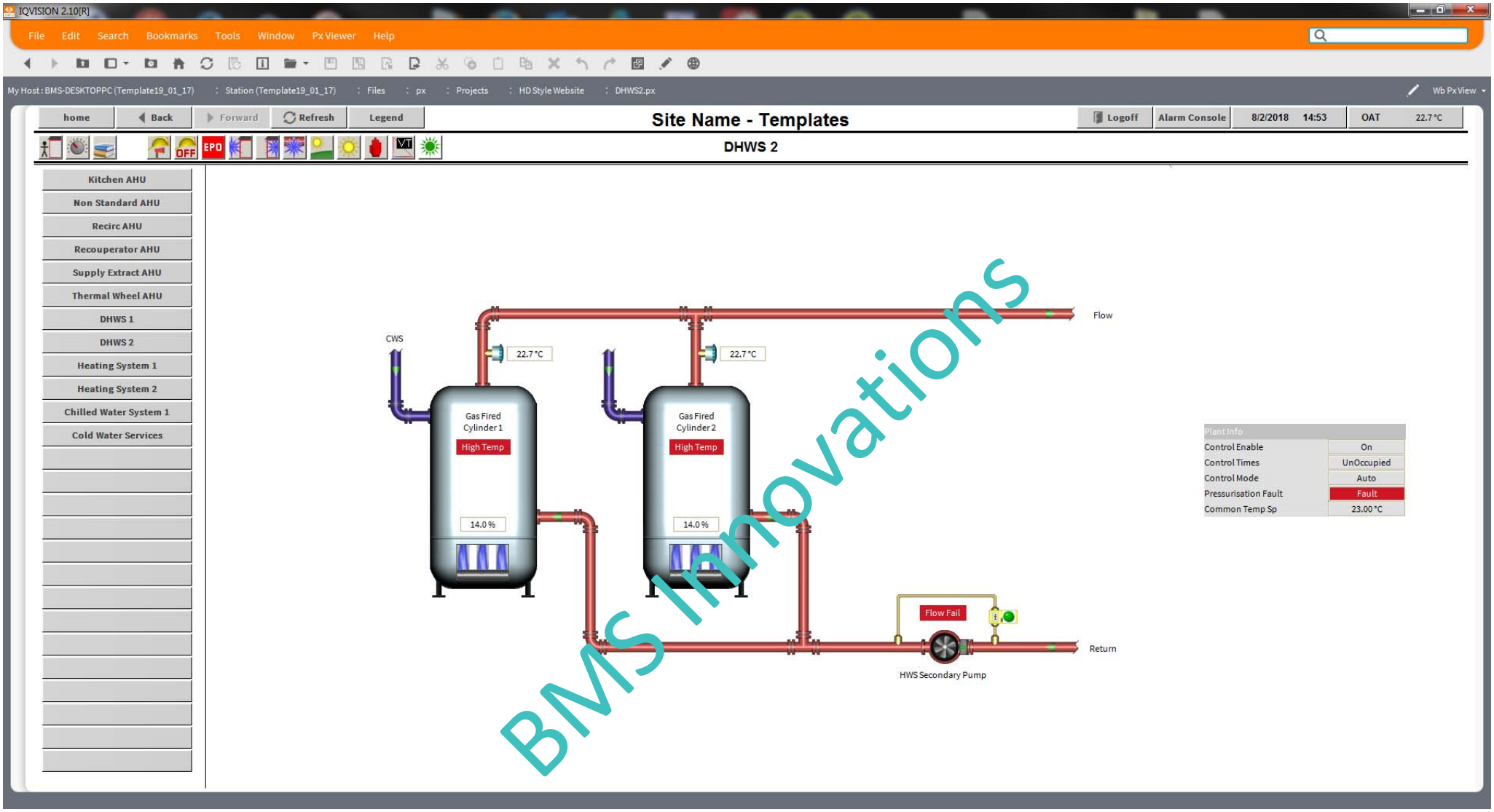

BMS Innovations

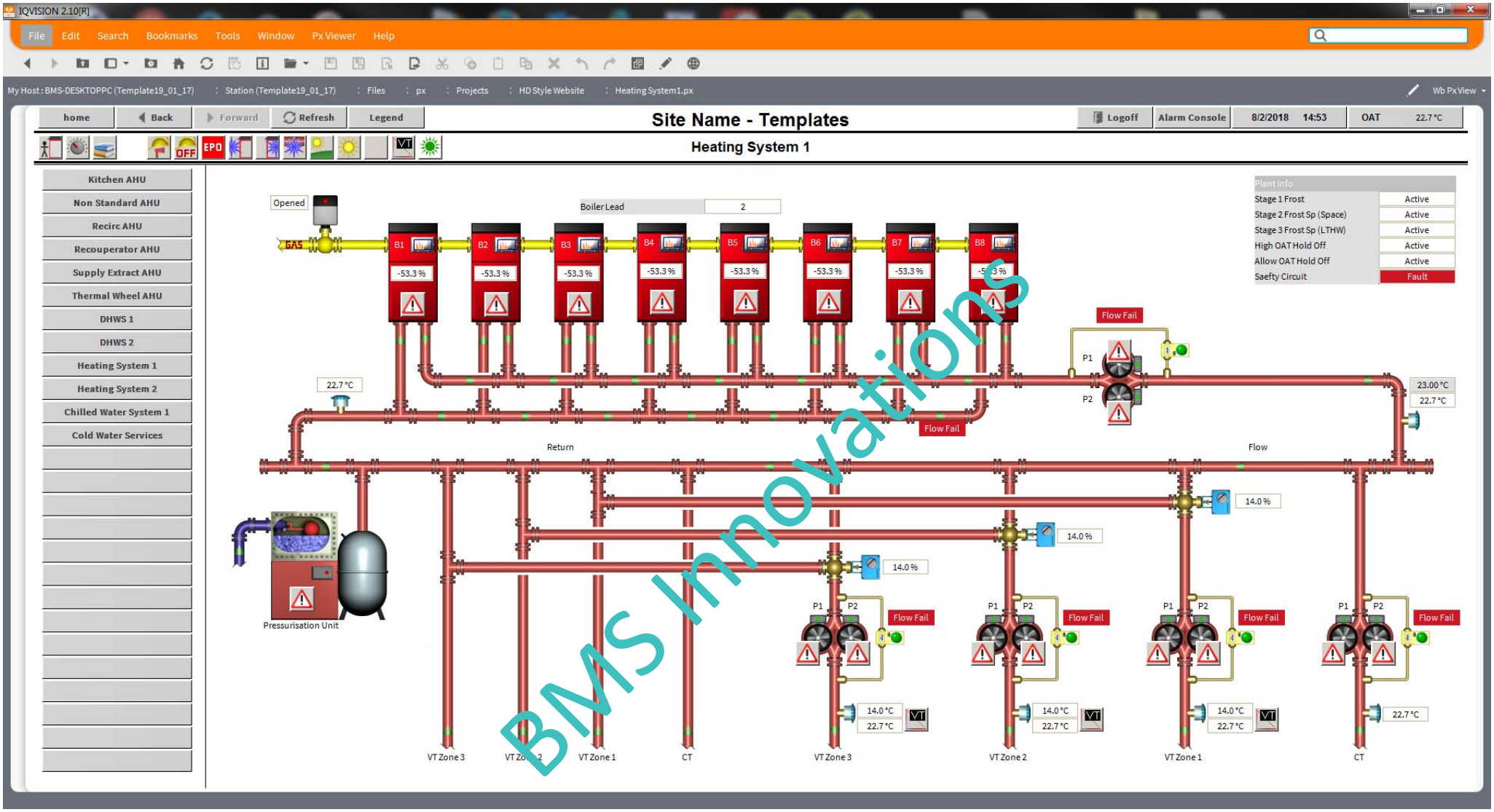
IQVISION 2.10[R]
File Edit Search Bookmarks Tools Window Px Viewer Help
My Host : BMS-DESKTOPPC (Template19_01_17) : Station (Template19_01_17) : Files : px : Projects : HD Style Website : Heating System1.px
Wb Px View
home
Back
Forward
Refresh
Legend
Site Name - Templates
Logoff
Alarm Console
8/2/2018 14:53
OAT 22.7 °C
Heating System 1
Kitchen AHU
Non Standard AHU
Recirc AHU
Recouperator AHU
Supply Extract AHU
Thermal Wheel AHU
DHWS 1
DHWS 2
Heating System 1
Heating System 2
Chilled Water System 1
Cold Water Services
Opened
GAS
Boiler Lead 2
B1 -53.3 %
B2 -53.3 %
B3 -53.3 %
B4 -53.3 %
B5 -53.3 %
B6 -53.3 %
B7 -53.3 %
B8 -53.3 %
Plant Info
Stage 1 Frost Active
Stage 2 Frost Sp (Space) Active
Stage 3 Frost Sp (LTHW) Active
High OAT Hold Off Active
Allow OAT Hold Off Active
Saefty Circuit Fault
Flow Fail
P1
P2
22.7 °C
23.00 °C
22.7 °C
Return
Flow
14.0 %
Pressurisation Unit
14.0 °C
22.7 °C
VT Zone 3
VT Zone 2
VT Zone 1
CT
BMS Innovations

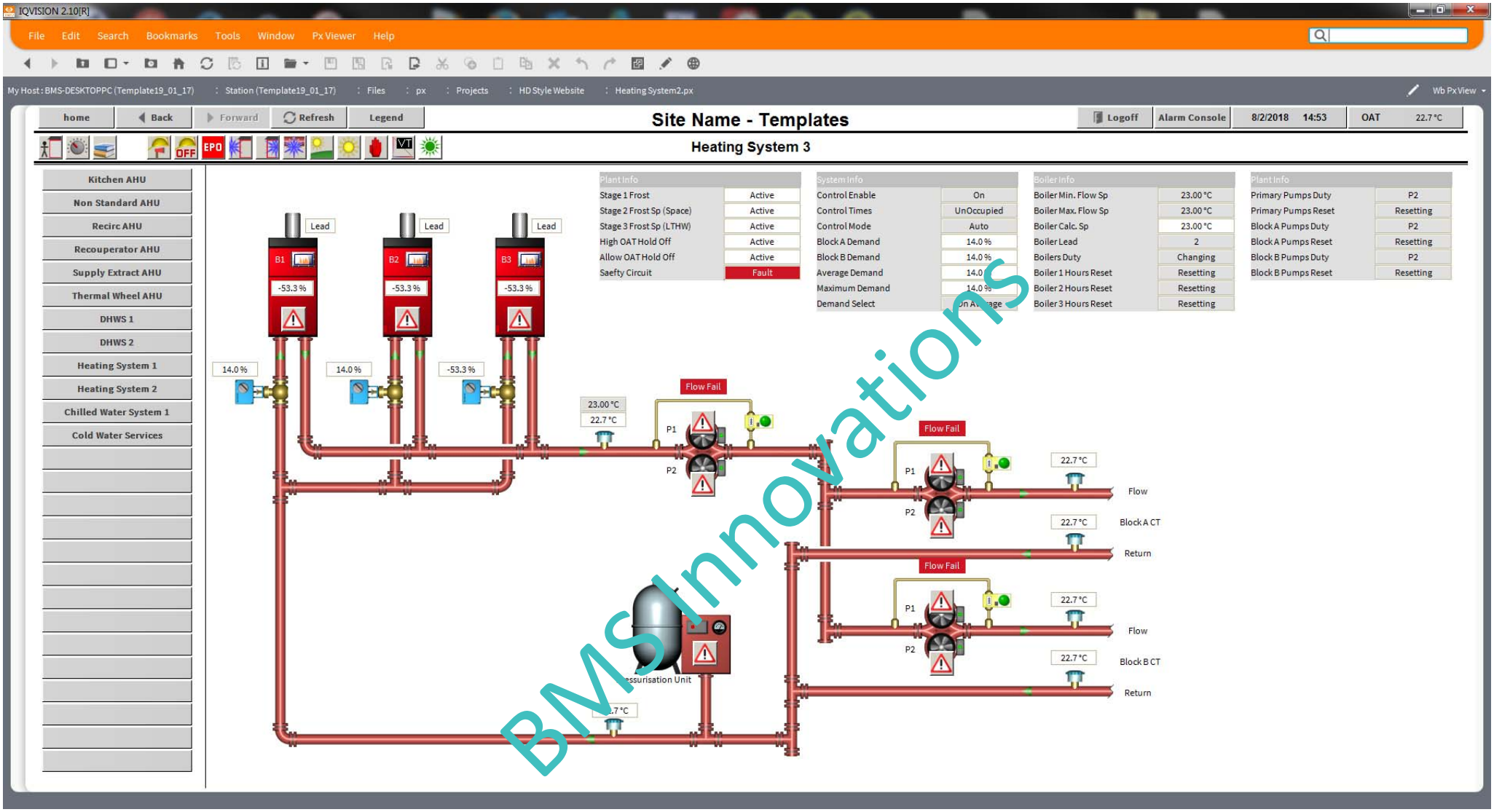

BMSInnovations

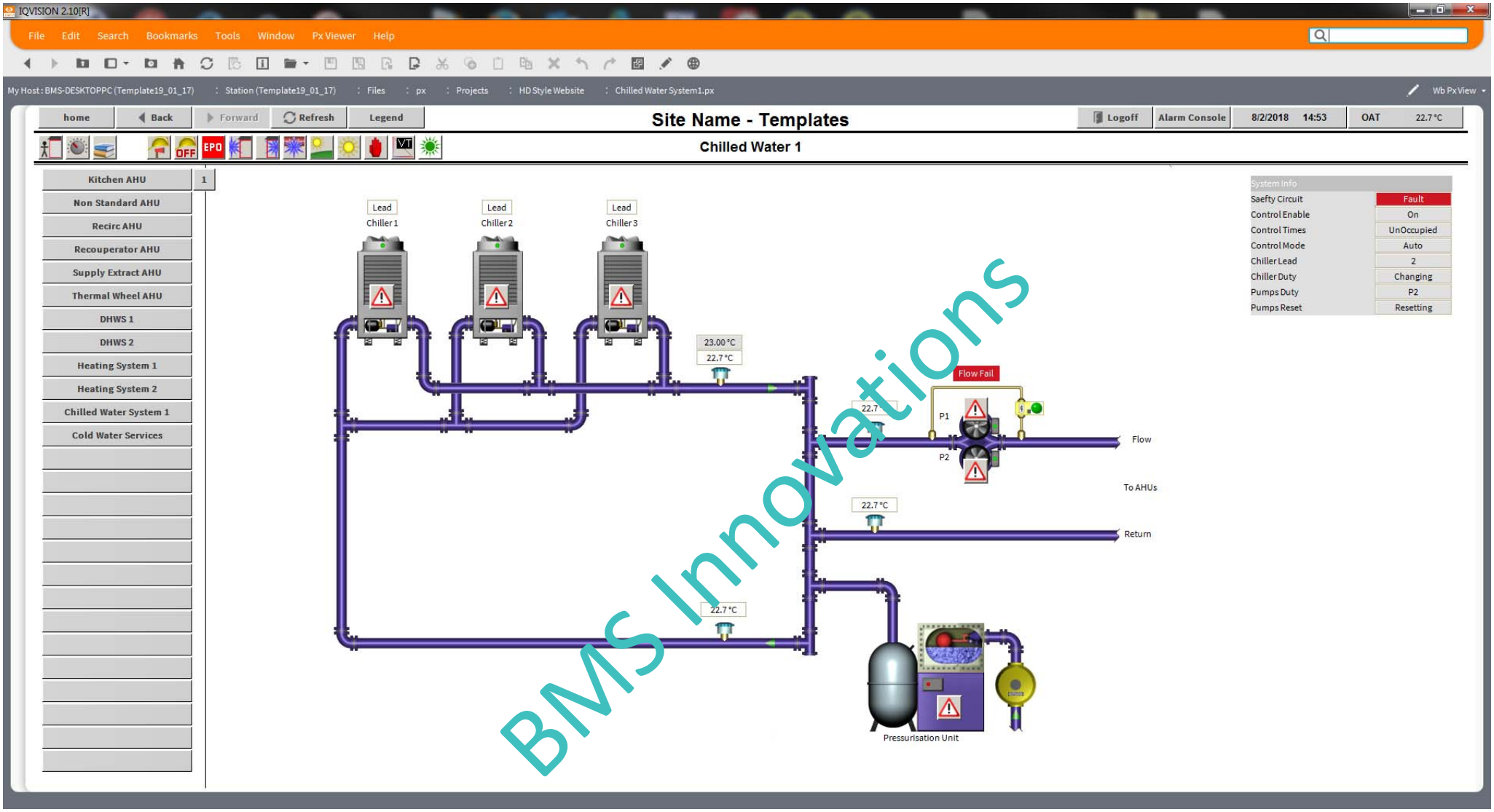
IQVISION 2.10[R]
File Edit Search Bookmarks Tools Window Px Viewer Help
My Host : BMS-DESKTOPPC (Template19_01_17) : Station (Template19_01_17) : Files : px : Projects : HD Style Website : Chilled Water System1.px
Wb Px View
home
Back
Forward
Refresh
Legend
Site Name - Templates
Logoff
Alarm Console
8/2/2018 14:53
OAT 22.7 °C
Chilled Water 1
Kitchen AHU
Non Standard AHU
Recirc AHU
Recouperator AHU
Supply Extract AHU
Thermal Wheel AHU
DHWS 1
DHWS 2
Heating System 1
Heating System 2
Chilled Water System 1
Cold Water Services
1
Lead
Chiller 1
Lead
Chiller 2
Lead
Chiller 3
23.00 °C
22.7 °C
Flow Fail
22.7
P1
P2
Flow
To AHUs
22.7 °C
Return
22.7 °C
Pressurisation Unit
System Info
Saefty Circuit Fault
Control Enable On
Control Times UnOccupied
Control Mode Auto
Chiller Lead 2
Chiller Duty Changing
Pumps Duty P2
Pumps Reset Resetting
BMS Innovations

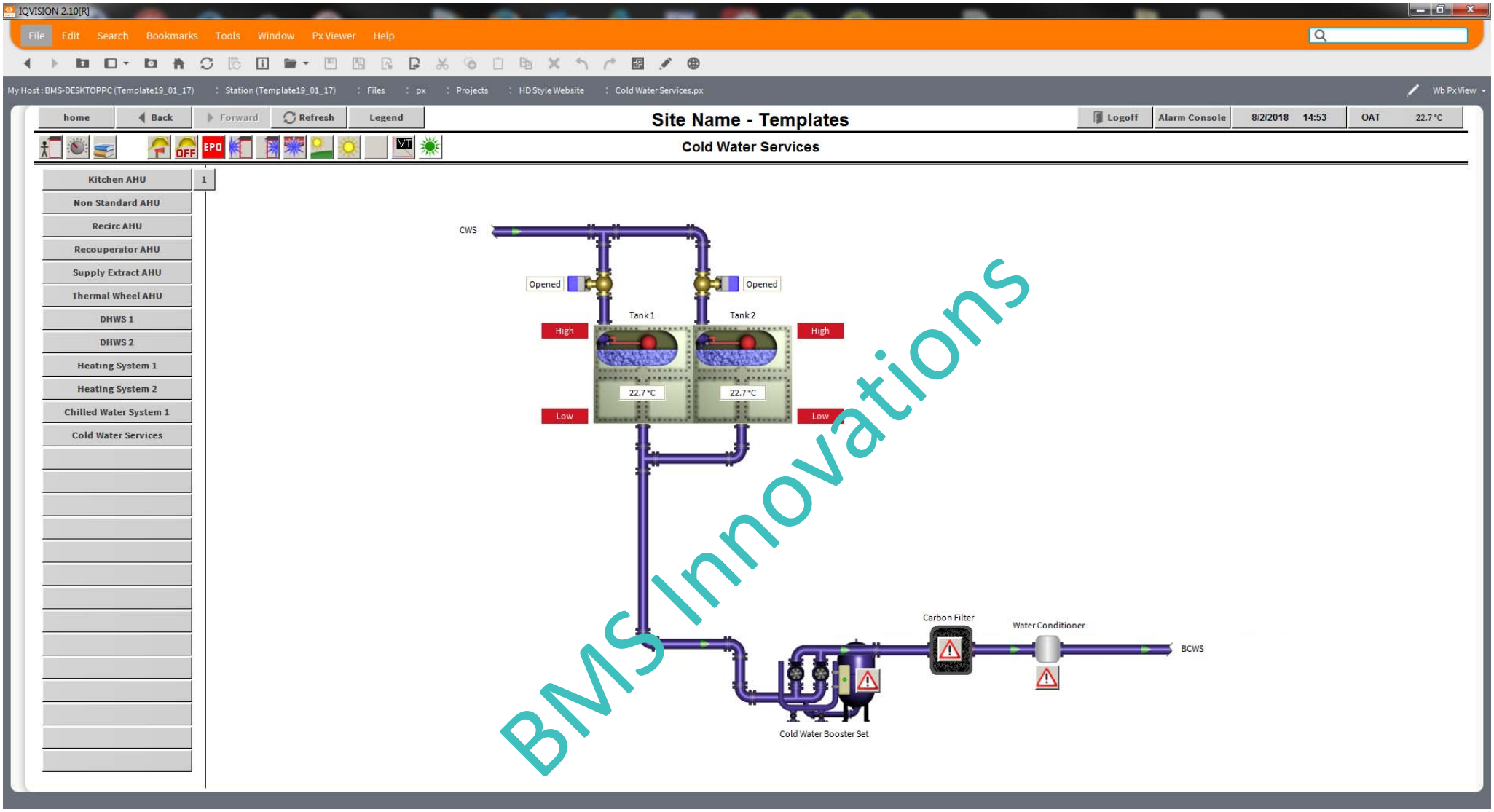

BMS Innovations